GAST MANUFACTURING, INC.
A Unit of IDEX Corporation
Post Office Box 97
Benton Harbor, Michigan
Ph: 269/926-6171
Fax: 269/925-8288

PART NUMBER:

RTD906

REV.: A

Model Number	Motor	RPM 60HZ.	RPM 50HZ.	HP	kW	Net Wt. lbs.	Net Wt. kg
3LBA-55S-M300AX	115	1725		1/3	0.25	30.2	13.6

NOTES:
1. TECHNICAL DATA SUBJECT TO CHANGE WITHOUT NOTICE.

SOUND LEVEL: LESS THAN 75 dB(A)
NORMAL AMBIENT: +5 degC - +40 degC
RELATIVE HUMIDITY: 20% - 80%
ENVIRONMENT: Clean Dust Free
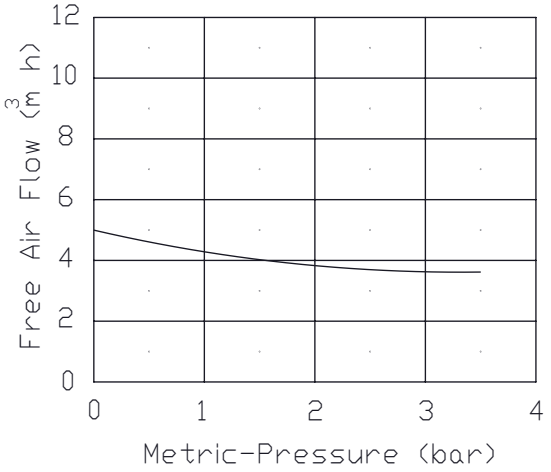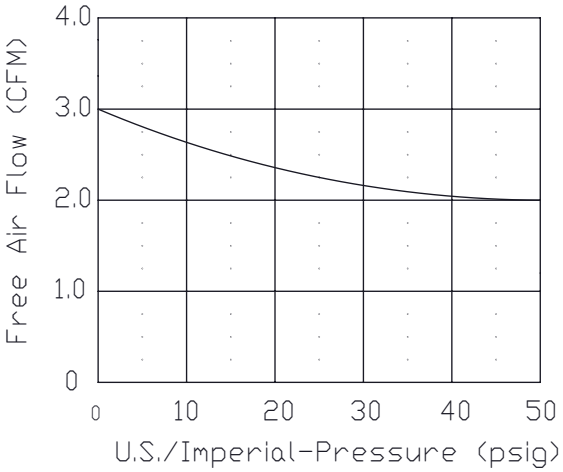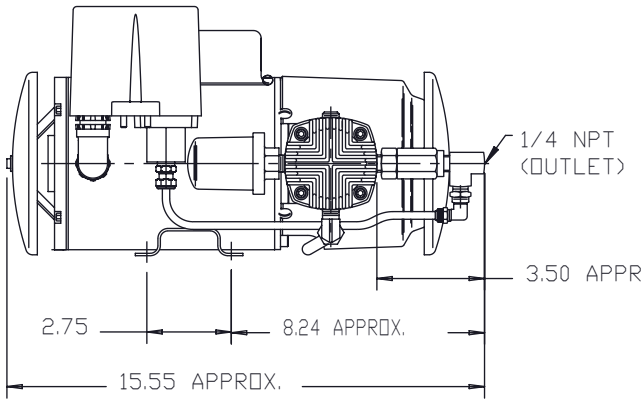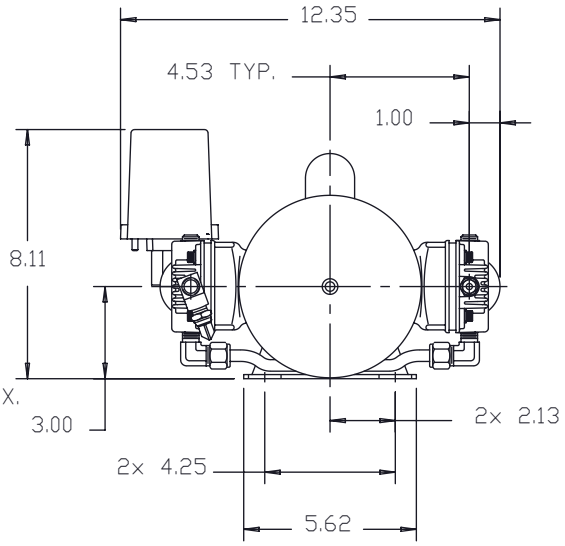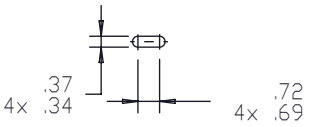
PRODUCT PERFORMANCE