GAST MANUFACTURING, INC.
A Unit of IDEX Corporation
Post Office Box 97
Benton Harbor, Michigan
Ph: 269/926-6171
Fax: 269/925-8288

PART NUMBER: RTD746

REV.: A

Product Specifications

Model Number	Motor	RPM		HP	kW	Net Wt.	
		60 cycle	50 cycle			lbs.	kg
2LAF-10-M200X	115	1725		1/4	0,19	25	11.3

NOTES:
1. TECHNICAL DATA SUBJECT TO CHANGE WITHOUT NOTICE.
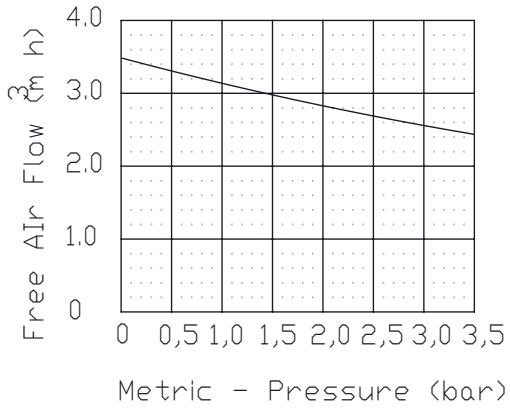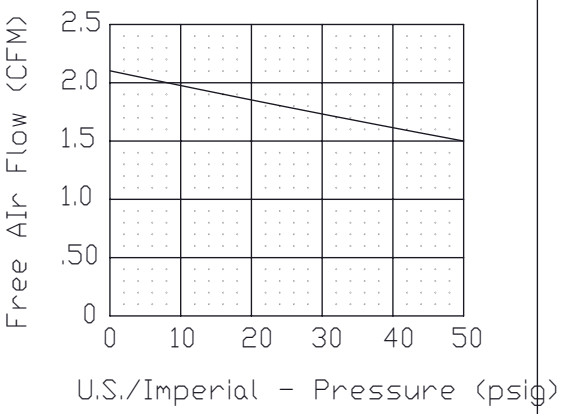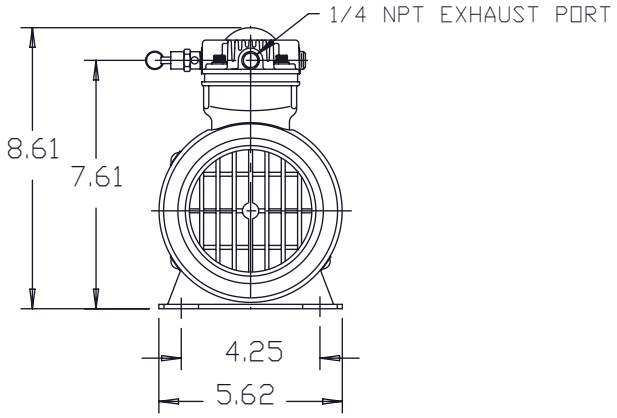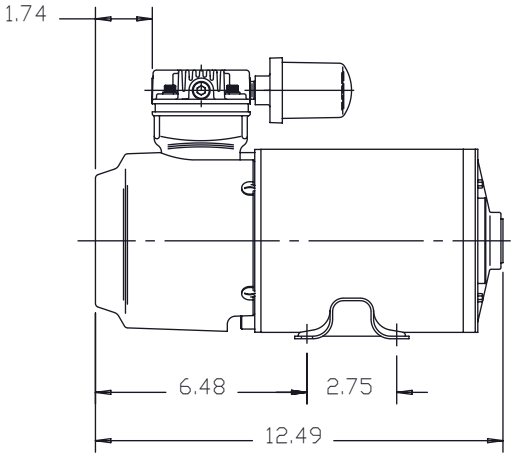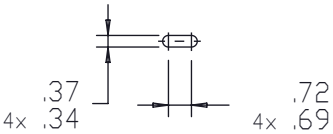
SOUND LEVEL	LESS THAN 75 dB(A)
NORMAL AMBIENT	+5 degC - +40 degC
RELATIVE HUMIDITY	20% - 80%
ENVIRONMENT	Clean Dust Free