GAST MANUFACTURING, INC.
A Unit of IDEX Corporation
Post Office Box 97
Benton Harbor, Michigan
Ph: 269/926-6171
Fax: 269/925-8288

PART NUMBER: RTD741

REV.: A

Product Specifications

Model Number	Motor	RPM		HP	kW	Net Wt.	
		60 cycle	50 cycle			lbs.	kg
1VAF-10-M100X	115	1725		1/6	0,12	21	9,50

NOTES:
1. TECHNICAL DATA SUBJECT TO CHANGE WITHOUT NOTICE.

SOUND LEVEL: LESS THAN 70 dB(A)
NORMAL AMBIENT: +5 degC - +40 degC
RELATIVE HUMIDITY: 20% - 80%
ENVIRONMENT: Clean Dust Free
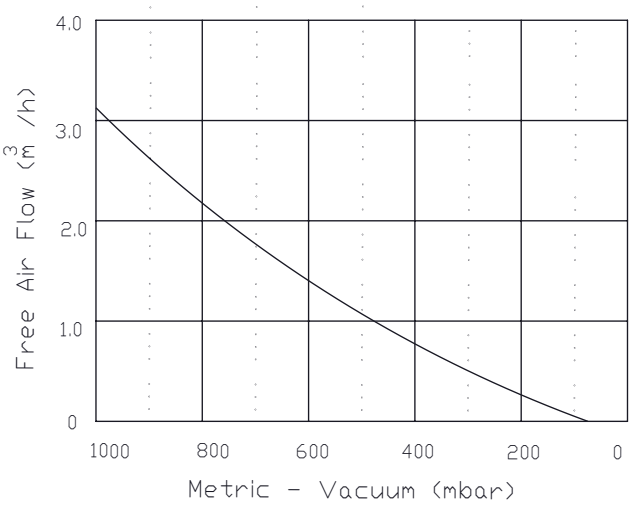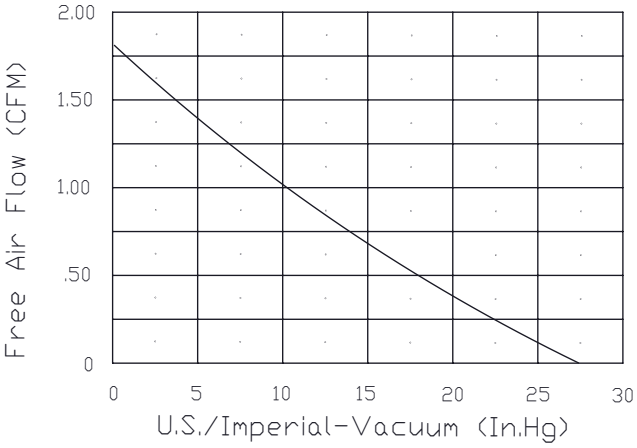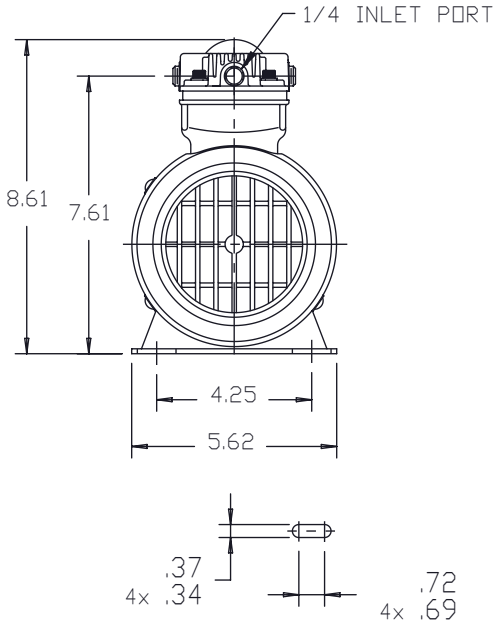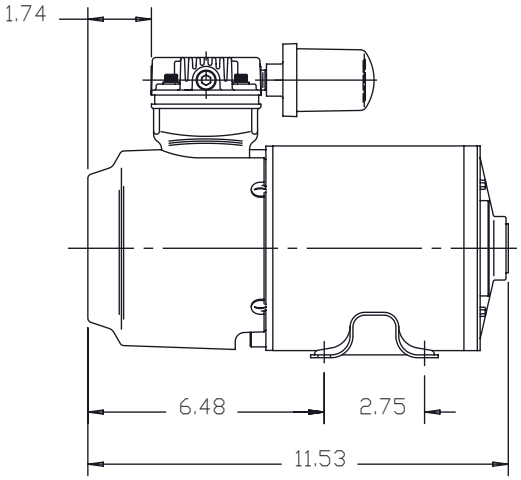
PRODUCT PERFORMANCE