GAST MANUFACTURING, INC.
A Unit of IDEX Corporation
Post Office Box 97
Benton Harbor, Michigan
Ph: 269/926-6171
Fax: 269/925-8288

Product Specifications

PART NUMBER: LTD158A

REV. B

MODEL NUMBER	MOTOR SPECIFICATIONS	RPM	MAX VAC		MAX PRESS		HP	kW	NET WT.	
			"H_2O	mbar	"H_2O	mbar			lbs.	kg
R5325B-2	575-60-3	3450	60	149	65	162	2.5	1.86	65	29.5

SOUND LEVEL 75 dB(A) MAX. @ 60 Hz
NORMAL AMBIENT -29°C TO 40°C
RELATIVE HUMIDITY 0% - 100% NON CONDENSING
ENVIRONMENT CLEAN DUST FREE

TECHNICAL DATA SUBJECT TO CHANGE WITHOUT NOTICE.

* = RECOMMENDED MAXIMUM DUTY
— — INTERMITTENT DUTY ONLY

Product Performance (Metric U.S. Imperial)

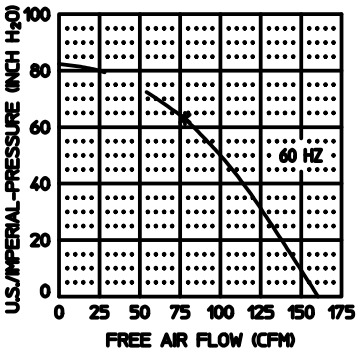

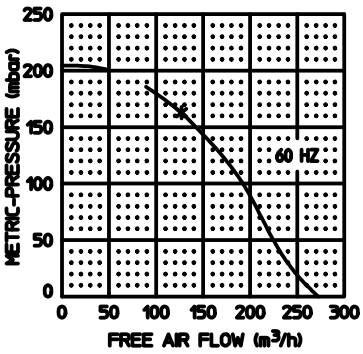

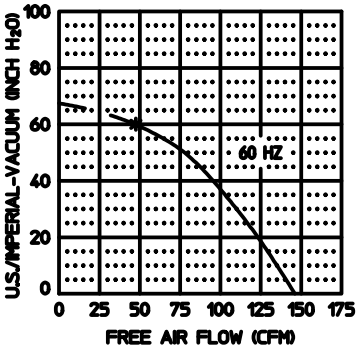

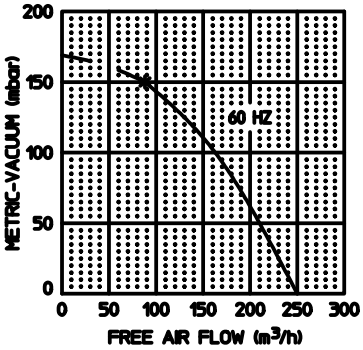

PERFORMANCE DATA
THE PERFORMANCE DATA SHOWN WAS DETERMINED UNDER THE FOLLOWING CONDITIONS:

LINE VOLTAGE @ 60 Hz. 230V OR 460V FOR 3 PHASE UNITS. 115V OR 230V FOR 1 PHASE UNITS.

LINE VOLTAGE @ 50 Hz. 220V FOR 3 PHASE OR 1 PHASE UNITS.

UNITS IN A TEMPERATURE STABLE CONDITION.

DELIVERY MEASUREMENTS MADE WITH OUTPUT PORT THROTTLED.

SUCTION MEASUREMENTS MADE WITH INPUT PORT THROTTLED.

TEST CONDITIONS: INLET AIR DENSITY @ 0.075 lbs. per cu. ft. [20°C (68°F), 29.92" Hg (14.7 PSIA)].

NORMAL PERFORMANCE VARIATIONS ON THE RISISTANCE CURVE WITHIN ±10% OF SUPPLIED DATA CAN BE EXPECTED.
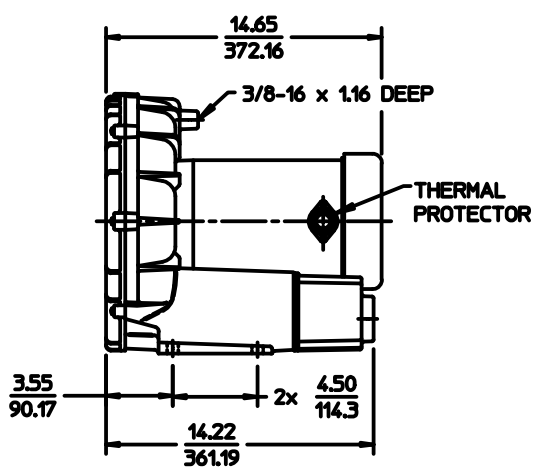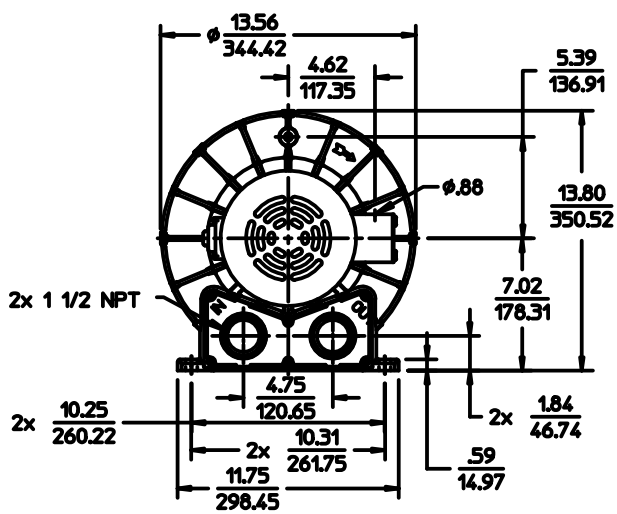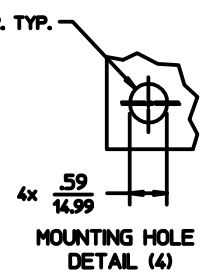
Product Dimensions U.S. Imperial (inches)/Metric (mm)