Product Specifications

GAST MANUFACTURING, INC.
A Unit of IDEX Corporation
Post Office Box 97
Benton Harbor, Michigan
Ph: 269/926-6171
Fax: 269/925-8288

Model	V	HP	kW	Hz	Part Number:	Revision
8LDF-46S-M850X	115/230	2.0	1.49	50/60	RTD732	B

1725
1425

75-81 dBA

+ 5 °C

+ 40

20-80

90 lbs.
40.5 kg

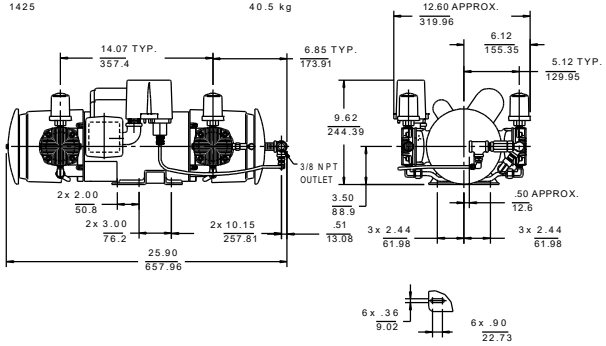

NOTES:
1. ALL DIMENSIONS ARE FOR REFERENCE USE ONLY.
2. PRODUCT DIMENSIONS: U.S. IMPERIAL (inches) METRIC (mm).
3. TECHNICAL DATA SUBJECT TO CHANGE WITHOUT NOTICE.
4 ENVIRONMENT: CLEAN DUST FREE.
5. FACTORY SETTING: CUT-IN 40 PSI` 2 PSI/CUT-OUT 50 PSI `2 PSI.
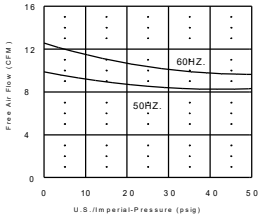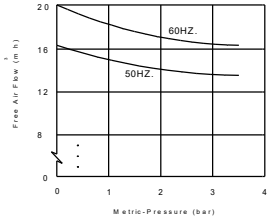
PRODUCT PERFORMANCE